PRODUCT SHEET

Description:
Cent. Lock 1018/700mm, 4x8mm Pegs, ø19x20mm, NPL, CK SISO, 40mm Tail

Item number:
14.03.139-0

Units	Box	Carton	HS Code	Barcode
Pcs.	24	120	8301300000	5704866035118

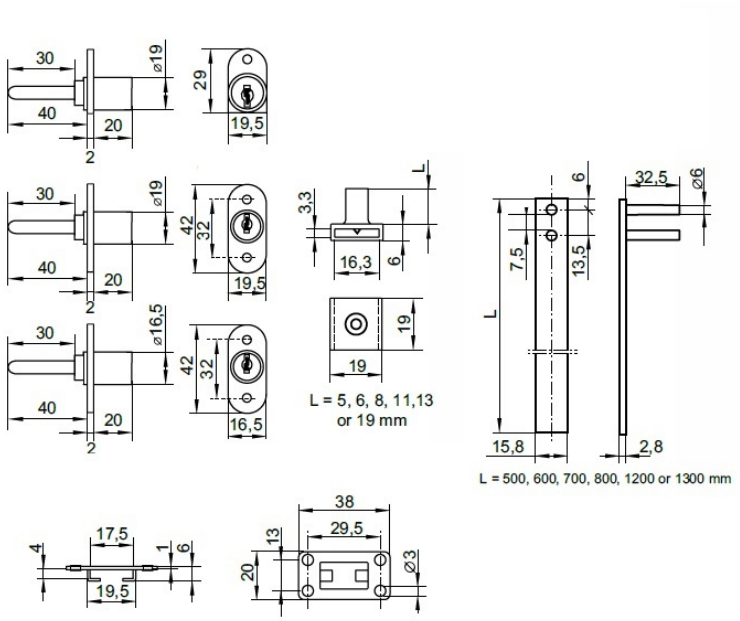

SISO A/S
Mileparken 11
DK-2740 Skovlunde
Denmark
VAT: DK 24786013

Phone +45 45 830 900

www.siso.dk
siso@siso.dk

Danske Bank
Nytorv Branch
Copenhagen
SWIFT: DABADKKK

Account no.
4180 3112 112936
IBAN Account
DK7230003112112936